GT7: Large Professional Triple-Reel Mower Robot







Unique feature: Vacuum-Only Mode .



4WD, 30° Slope







120 Liter Grass Collection Box

Mowing Area per Charge: 70,000 m²

Reel Mower vs. Rotary Mower

GT3 and GT5 Rotary cutting deck

High-speed rotational impact cutting

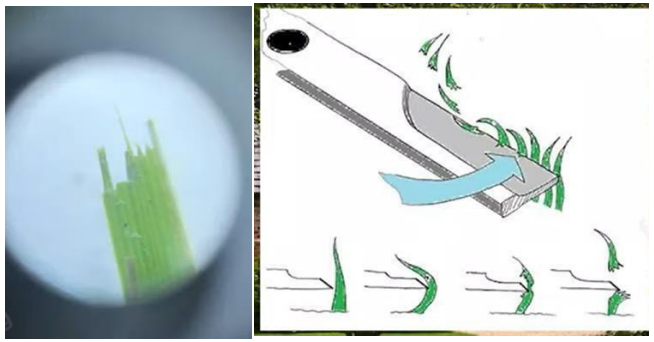

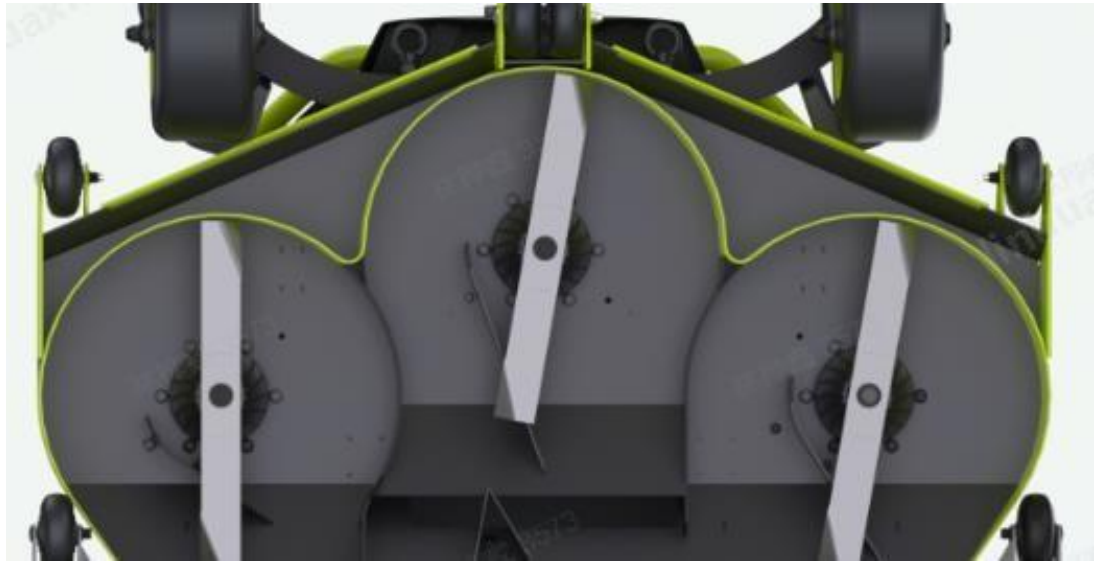

GT7 Reel cutting unit

Reel blade and bedknife form a scissor cut



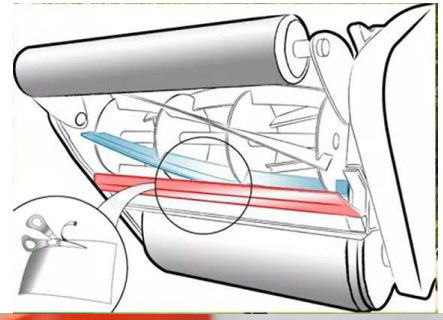

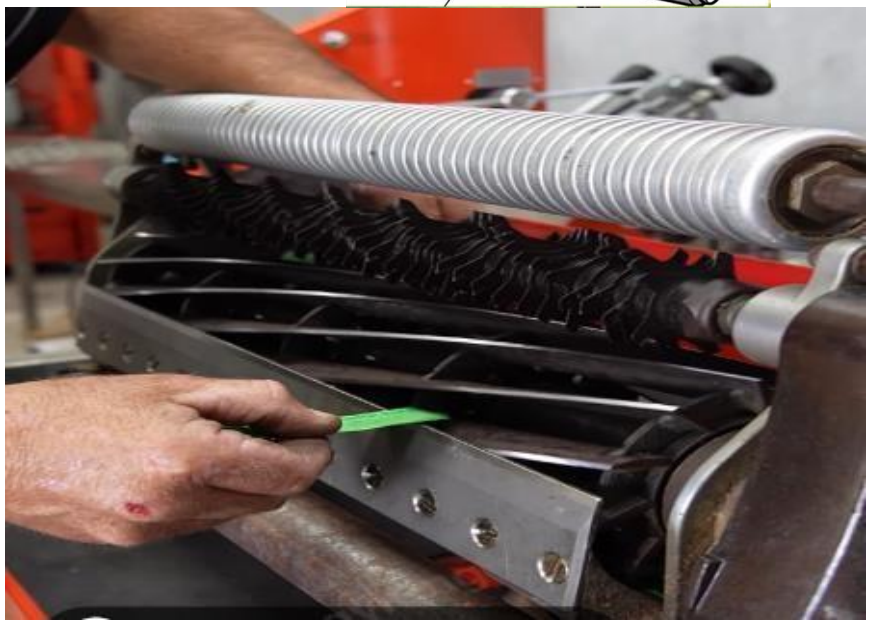

GT7-Functional structure





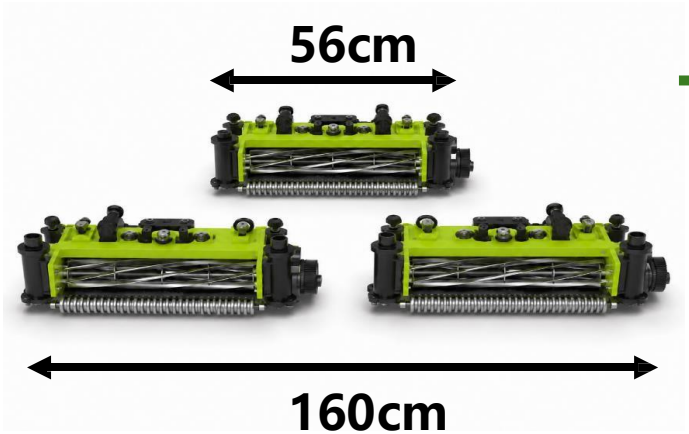

3 cutting units(Triplex)

Height of Cut: 5–50 mm

62 in Cutting Width (160 cm)

Mowing Area per Charge: 70,000 m²

Precision Cutting — Lower • Cleaner • More Precise

Cuts low | 5 mm cut close to the ground



Precise | 0.2 mm increments height control

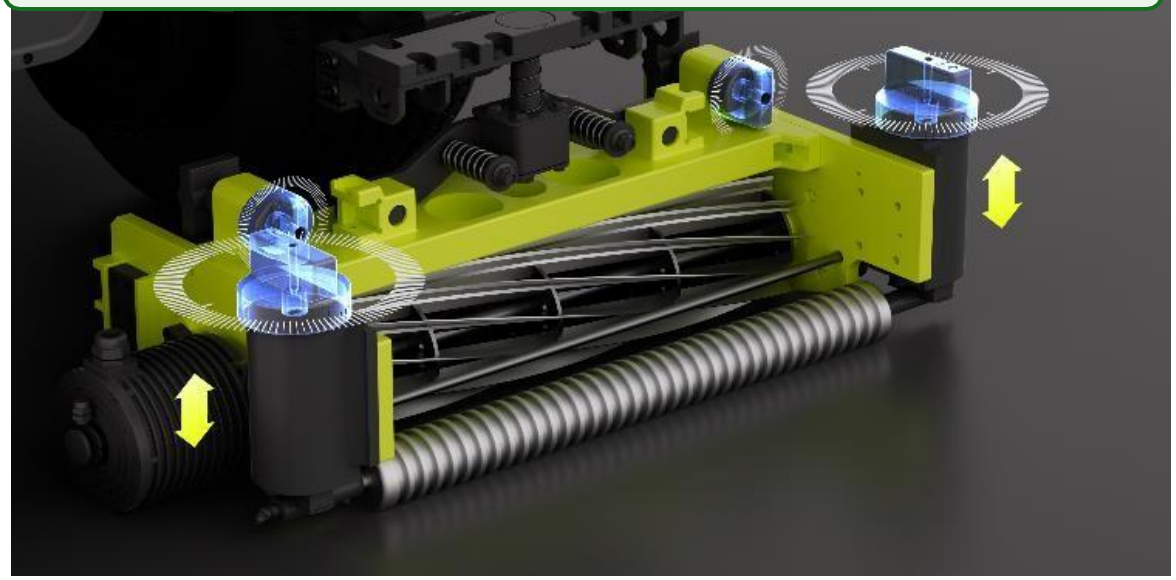

Clean cut | Smooth edges

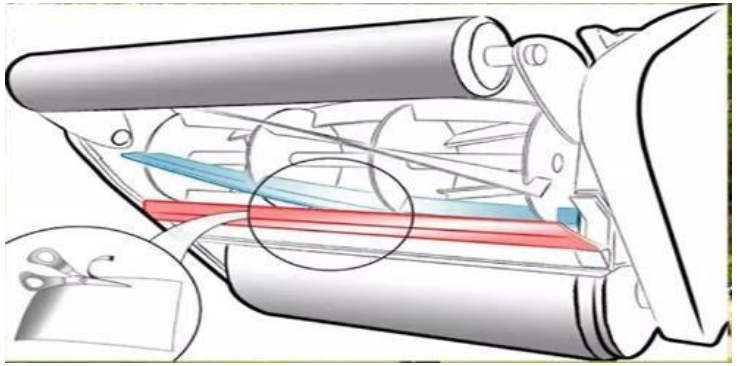

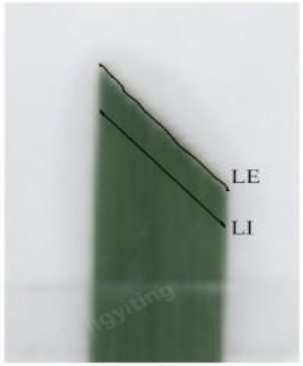

Adaptable | one machine for more scenarios

Golf Course Areas	Height of Cut (HOC)	GT7 Compatibility
Fairway	10–20 mm	✓ Core Application
Rough	25–50 mm	✓ Core Application
Tee Box	6–10 mm	✓
Collar	6–13 mm	✓

Mowing Direction Management



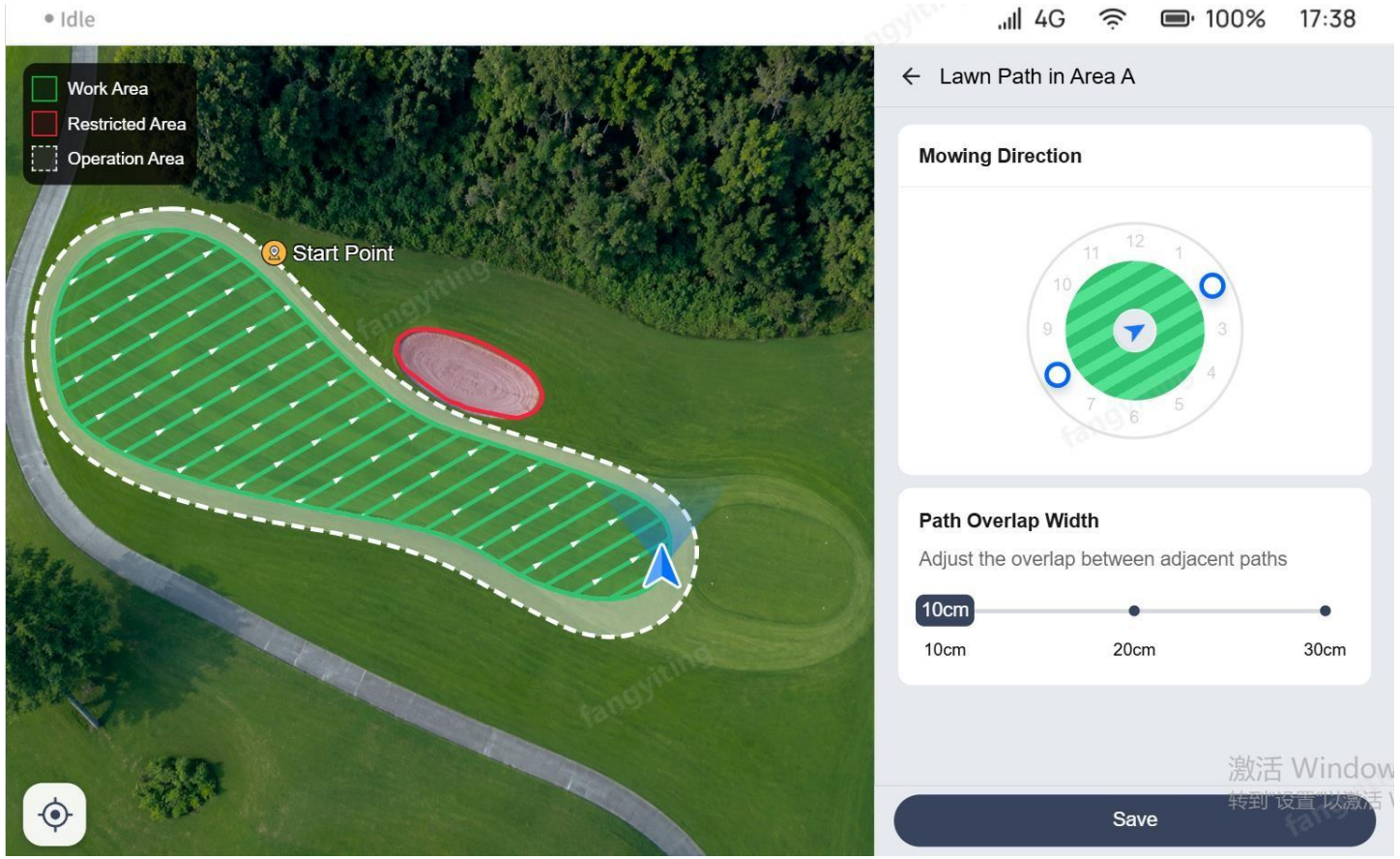

Customizable mowing direction and paths

Every cut meets visual standards while balancing efficiency and turf health

Dimensions (L × W × H)	1950 × 1600 × 1400 mm（76.8 × 63.0 × 55.1 in) lifted 1950 × 1500 × 1400 mm（76.8 × 59.1 × 55.1 in）
Weight (with batteries)	900 kg / 1984 lb
Platform Load Capacity	120 kg / 265 lb
IP Rating	IP66
Cutting Unit Type / Qty	3
Width of Cut	62 in / 1600 mm
Reel Diameter	5 in / 125 mm
Blades per Reel	8 or 11
Height of Cut (HOC)	5–50 mm / 0.197–1.97 in
Floating / Fixed Units	Floating Units
Deck Pitch / Roll / Yaw Range	Pitch 20.5° / Roll 14° / Yaw 10°
Collection Width	1560 mm / 61.5 in
Clipping Capacity	120L
Mowing Rate	2 acres/h / 8000 m²/h
Max Mowing Speed	11 km/h / 6.7 mph / 3 m/s
Max Transport Speed	11 km/h / 6.7 mph / 3 m/s
Max Slope – Mowing	30°
Max Side Slope – Mowing	30°
Battery Capacity	26 kWh
Battery Chemistry	LFP
Run-time	8–10 h
Area per Full Charge	70000 m² / 17 acres / 7 ha
Charging Time (fast / standard)	Standard: 8 h (3 kW)；Fast: 4 h (6 kW) Optional
Max Map Area	1000000 m² / 100 ha / 247.11 acres
App / Fleet Management	Support
Ground pressure	Front 0.42 bar, Rear-wheel 0.44 bar

Key Specifications- GT7



PUDU

LINKBOTICS

PUDU GT7

Precision-Cut Robotic Reel Mower



GT Series Product Matrix: Typical Area × Applications

GT3 • GT5 • GT7

Application	Various Campus Lawns	Large Area Commercial Lawns	Professional turf
70,000㎡			precision-cut robotic reel mower GT7  • Professional Reel Cutting • Uniform textures and premium turf stripes • 4WD Grip Any Terrain
50,000㎡		commercial robotic mower GT5  • Maximum Efficiency • All-Terrain Coverage • Flexible Cutting	
≤30,000㎡	Commercial compact robotic mower GT3  • 4-in-One Versatility • Agile Maneuverability • One-button start		
	Designed for Fragmented Areas	Built for Efficiency & Scale	Designed for Premium Turf Quality

	GT3	GT5	GT7
Total Cutting Width	**91cm** **36inch**	**152cm** **60inch**	**160cm** **62inch**
	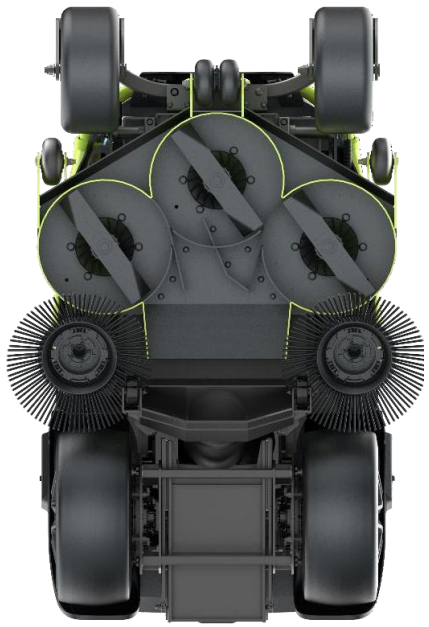		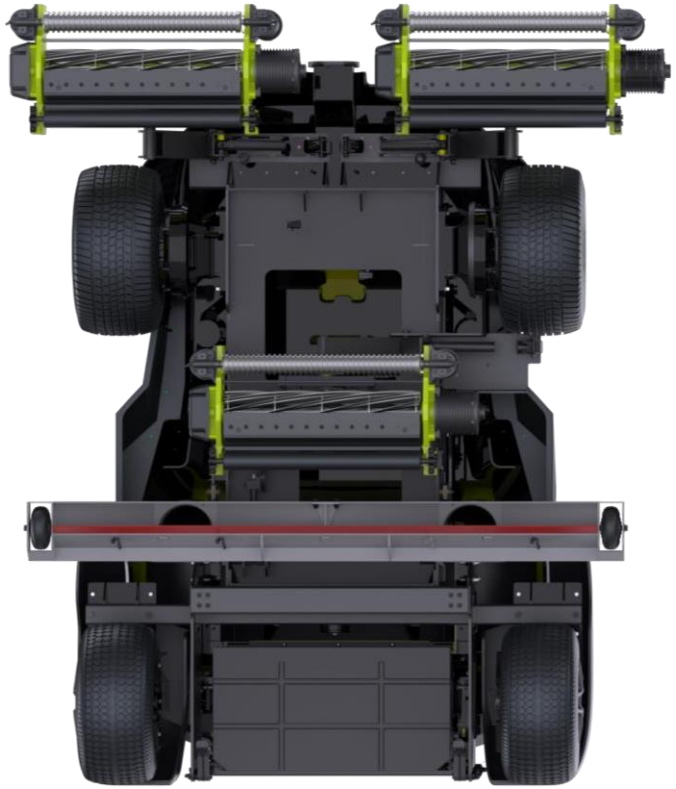
Overall Dimensions (L × W × H)	160.2 × 94.66 × 120	191.05×158×130	195 × 160 (cutting units lowered) × 140

LINKBOTICS

GT3	GT5	GT7
		
Commercial compact robotic mower	**Commercial robotic mower**	**Precision-cut robotic reel mower**
Small to medium campus	**Large, continuous areas**	**Golf Courses and Sports Fields**
Mowing + sweeping+vacuuming+dumping in the fragmented campus lawn	**High-efficiency mowing + vacuuming+dumping in large open Lawns**	**Precision mowing for professional sports turf**


LINKBOTIX