GT5: Large Commercial Grounds Maintenance Robot



GT5: Five Core Selling Points

A high-efficiency mow-and-collect robot for large commercial lawns

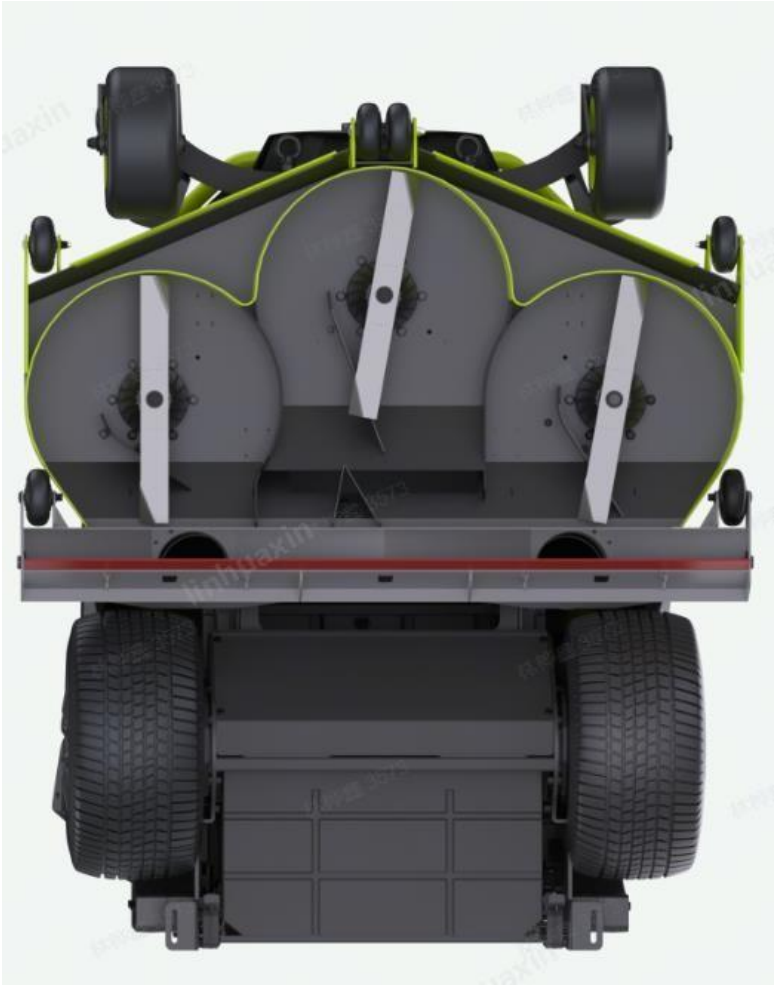



High-Efficiency Operation



All-terrain coverage



Flexible cutting height



All-in-one mow& collect & dump



Fusion navigation, smart obstacle avoidance

High productivity and efficiency

GT5-Functional structure





152cm in Cutting Width

Up to 60,000 m² per Charge

8-Hour Runtime

10 cm Obstacle-Crossing Capability

120 Liter Grass Collection Box

LINKBOTICS

One Charge, Continuous Operation All Day







One charge, 8 football field

152cm Wide cutting deck

8 hours Ultra-long runtime

60,000 m² Mowing area per charge

3 in 1- mow + vacuum + dump

Unique feature:

Vacuum-Only Mode .

Not available on current competitors!

All-Terrain Coverage, Any Site





Climbs slopes and obstacles with ease

20°

Broader slope coverage

Covers steep slopes, drainage slopes, and undulating turf to meet the mowing needs of more complex sites

10 cm

Front-wheel vertical curb climb

No site modifications needed — cross-zone operation passes directly over common curbs

Key Specifications-GT5

Dimensions (L × W × H)	1910 × 1586 × 1293 mm（75.2 × 62.44 × 50.91 in）
Weight (with batteries)	850 kg / 1873.93 lb
Platform Load Capacity	120 kg / 265 lb
IP Rating	IP66
Width of Cut	60 in / 1.52 m
Height of Cut	26–152 mm / 1–6 in
Blades Qty	3
Grass Box Capacity	120 L / 32 gal
Collection Width	1500 mm / 59 in
Mowing Rate	2 acres/h / 8000 m²/h
Max Mowing Speed	11 km/h / 6.7 mph / 3 m/s
Max Transport Speed	11 km/h / 6.7 mph / 3 m/s
Max Slope – Mowing	20°
Max Side Slope – Mowing	20°
Battery Capacity	26 kWh
Battery Chemistry	LFP
Run-time	8–10 h
Area per Full Charge	65000 m² / 16 acres / 6.5 ha
Charging Time (fast / standard)	Standard: 8 h (3 kW)；Fast: 4 h (6 kW) Optional
Positioning Stack & Accuracy	±2.5 cm
Max Map Area	1000000 m² / 100 ha / 247.11 acres
App / Fleet Management	Support



GT Series Product Matrix: Typical Area × Applications

GT3 • GT5 • GT7

Application	Various Campus Lawns	Large Area Commercial Lawns	Professional turf
70,000㎡			precision-cut robotic reel mower GT7  • Professional Reel Cutting • Uniform textures and premium turf stripes • 4WD Grip Any Terrain
50,000㎡		commercial robotic mower GT5  • Maximum Efficiency • All-Terrain Coverage • Flexible Cutting	
≤30,000㎡	Commercial compact robotic mower GT3  • 4-in-One Versatility • Agile Maneuverability • One-button start		
	Designed for Fragmented Areas	Built for Efficiency & Scale	Designed for Premium Turf Quality

	GT3	GT5	GT7
Total Cutting Width	**91cm** **36inch**	**152cm** **60inch**	**160cm** **62inch**
	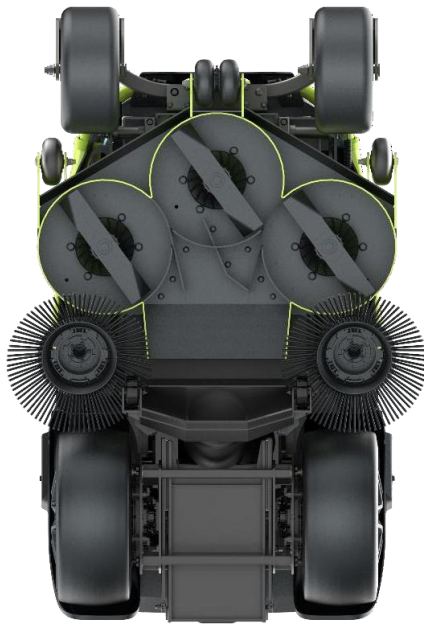	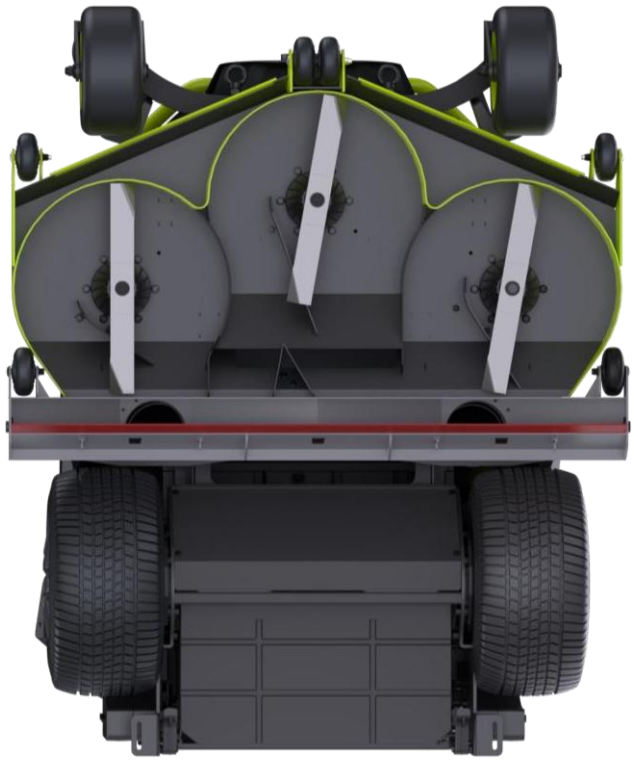	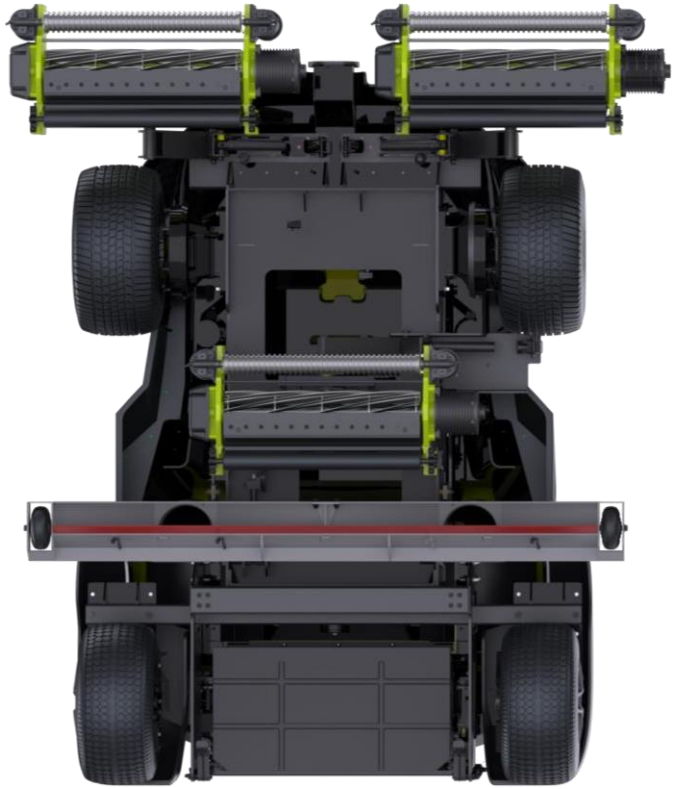
Overall Dimensions (L × W × H)	160.2 × 94.66 × 120	191.05×158×130	195 × 160 (cutting units lowered) × 140

LINKBOTICS

GT3	GT5	GT7
		
Commercial compact robotic mower	**Commercial robotic mower**	**Precision-cut robotic reel mower**
Small to medium campus	**Large, continuous areas**	**Golf Courses and Sports Fields**
Mowing + sweeping+vacuuming+dumping in the fragmented campus lawn	**High-efficiency mowing + vacuuming+dumping in large open Lawns**	**Precision mowing for professional sports turf**


LINKBOTIX