PUDU

PUDU GT3

Commercial Compact Robotic Mower



LINKBOTIX

GT3-Functional structure





Stand-on platform

36 in Cutting Width (91 cm)

Up to 30,000 m² per charge

4 Hour Runtime

60 Liter Grass Collection Box

10 cm Obstacle-Crossing



GT3: Five Core Selling Points

A mowing-and-sweeping robot for small-to-medium campus lawns

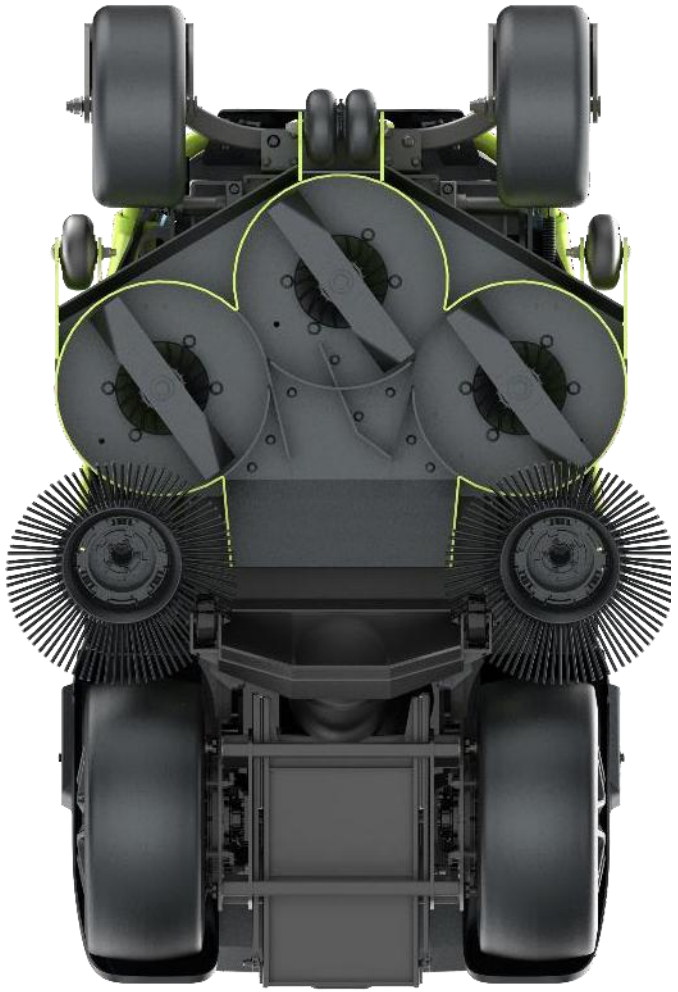



4 in one:
Mows, sweeps, vacuums ,dumps

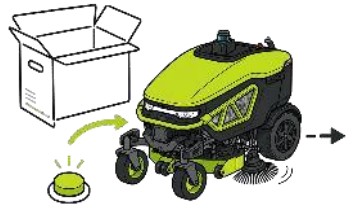

One-button start

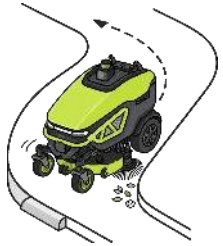

Agile in narrow spaces



Fusion navigation, smart obstacle avoidance



24H Fully Autonomous Operation

4 In one——Mows, Sweeps, Vacuum, Dumps

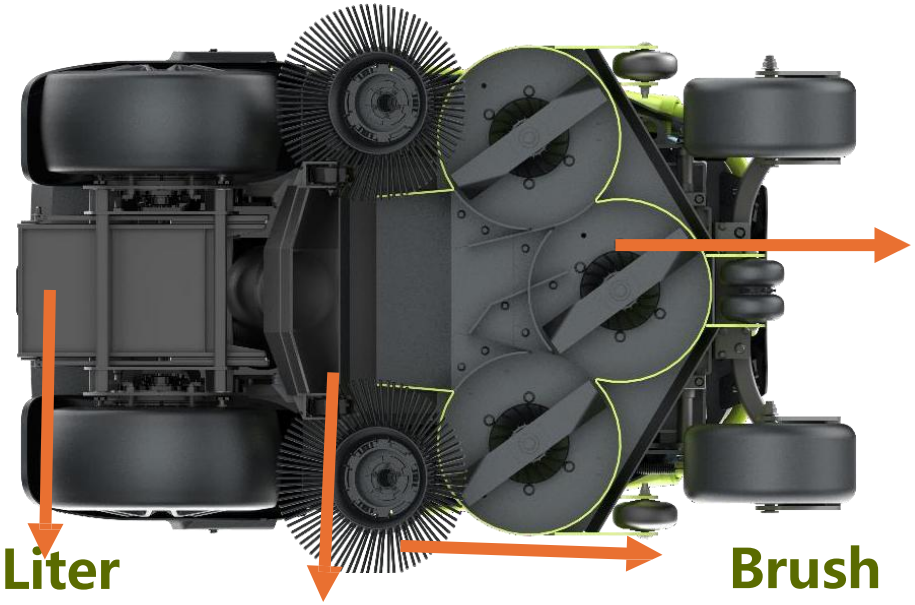



Not available on current competitors!

Unique feature: Even when the cutting blades are deactivated, the fan can still vacuum clippings and leaves independently.

- **8 gauge steel:** easily handles countinuous high-intensity work
- **2 cutting mode:** The cutting deck's airflow duct supports both rear discharge and mulching
- 40 cm × 7.2 cm vacuum intake port size:







24H Fully Autonomous Operation

Stand on GT3,GT5,GT7





Auto-Transit
Continuously executes tasks by zone and route

Breakpoint Resume
Returns to the interrupted position to continue unfinished tasks

24h Autonomous Cycle



Auto-Recharging
Automatically returns to the charging station when power is low

Auto-Dumping
Automatically drives to the dumping point to unload when full



Multi-Sensor Fusion: Precise Positioning, Clear Perception









Precise positioning: 2 cm

3D LiDAR + RTK

±2 cm Global positioning accuracy

1 million ㎡ Single-map area

150m LiDAR range

RTK: Real-time Kinematic

Fused perception: 360° with no blind spots

3D LiDAR + 4× RGBD + 4× RGB cameras

- **Proactive pedestrian avoidance**
- **AI terrain recognition**

  Intelligently recognizes cliffs, water bodies, steep slopes, curbs, and other hazards, and proactively avoids them

Stand on GT3,GT5,GT7

Path Planning：Full Coverage, Zero Missed Spots



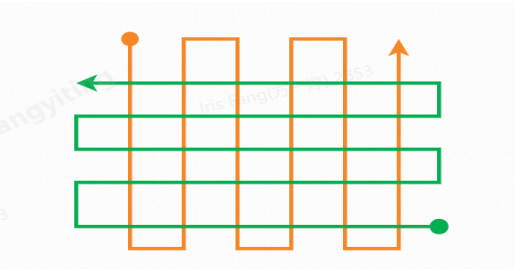

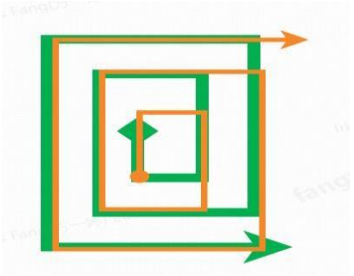

2 modes Linear mode and concentric mode

0 missed Resume & recut from breakpoint

2 ways Turning without damaging the turf
Supports three-point turns and U-turns

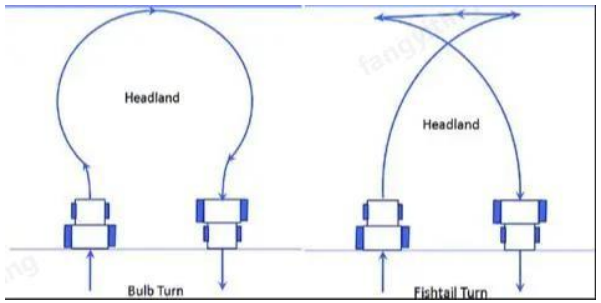

LiNKBOTiX

Stand on GT3,GT5,GT7

One-button start—Autonomous mapping&works

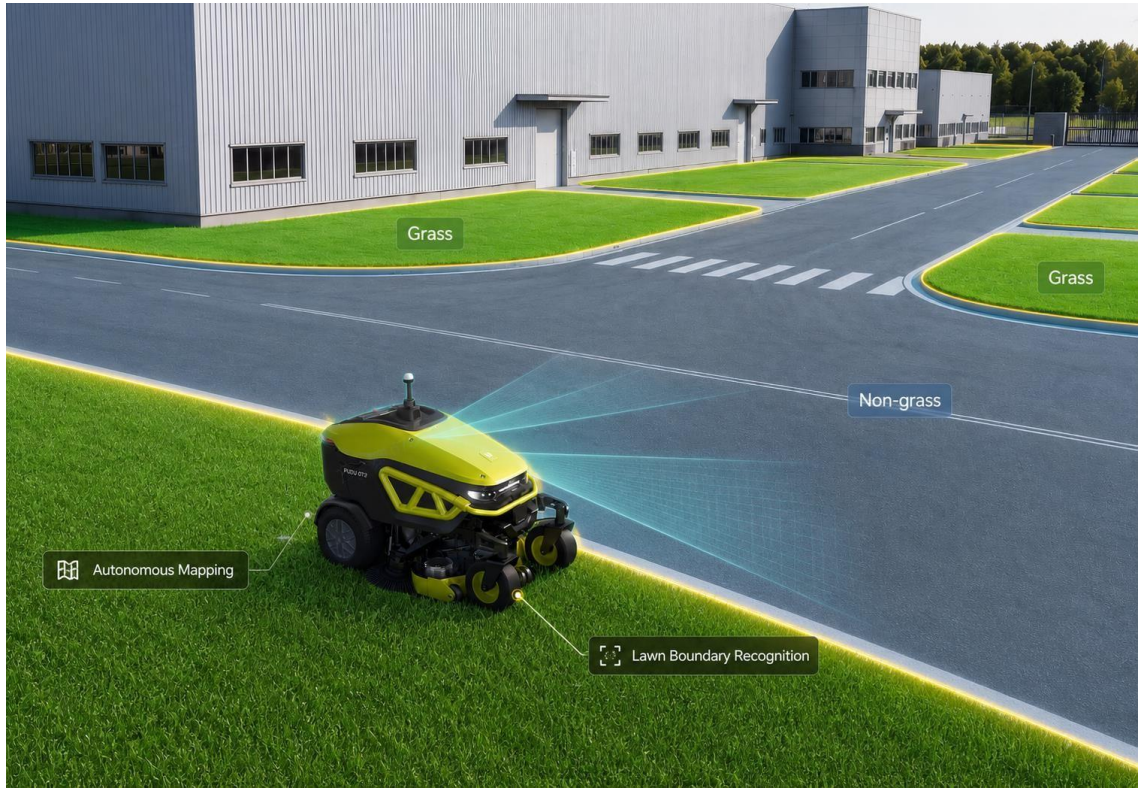

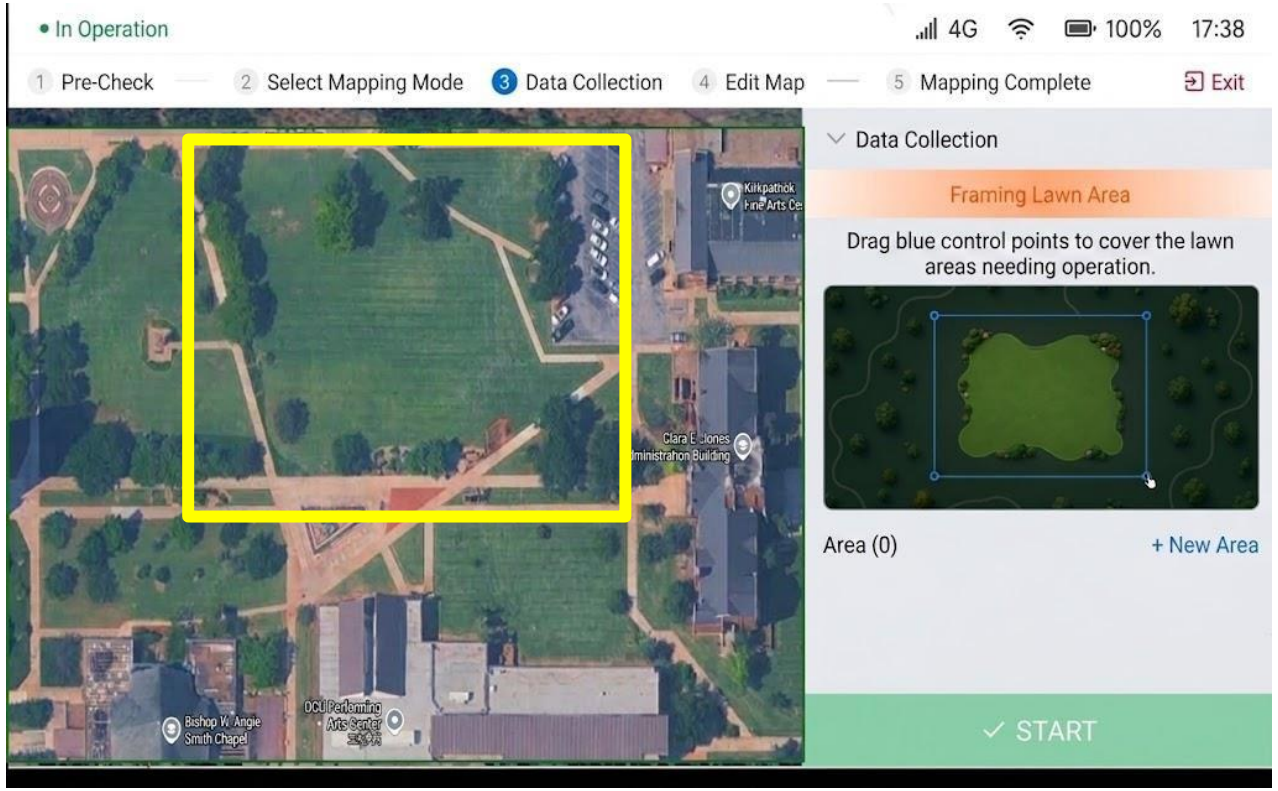

RTK global safety constraints + **Lawn boundary perception** + **Map-free path planning**

Key Specifications-GT3

Dimensions (L × W × H)	1662 × 946.6 × 1203 mm（63 × 37.3 × 47.4 in）
Weight (with batteries)	450 kg / 992 lb
Platform Load Capacity	120 kg / 265 lb
IP Rating	IP66
Width of Cut	36 in / 914.4 mm
Height of Cut	26–114 mm / 1–4.5 in
Blades Qty	3
Grass Box Capacity	60 L / 15.9 gal
Mowing Rate	5000 m²/h / 1.2 acres/h
Sweep & Vacuum Rate	3500 m²/h / 0.86 acre/h
Max Mowing Speed	11 km/h / 6.7 mph / 3 m/s
Max Transport Speed	11 km/h / 6.7 mph / 3 m/s
Max Slope – Mowing	20°
Max Side Slope – Mowing	20°
Battery Capacity	13 kWh
Battery Chemistry	LFP
Run-time	4–6 h
Area per Full Charge	30000 m²
Area per Full Charge (Sweep & Vacuum)	15000 m² / 3.7 acres / 1.5 ha
Charging Time (fast / standard)	Standard: 4 h (3 kW)；Fast: 2 h (6 kW) Optional
Positioning Stack & Accuracy	±2.5 cm
Max Map Area	1000000 m² / 100 ha / 247.11 acres
App / Fleet Management	Support



	GT3	GT5	GT7
Total Cutting Width	**91cm** **36inch**	**152cm** **60inch**	**160cm** **62inch**
	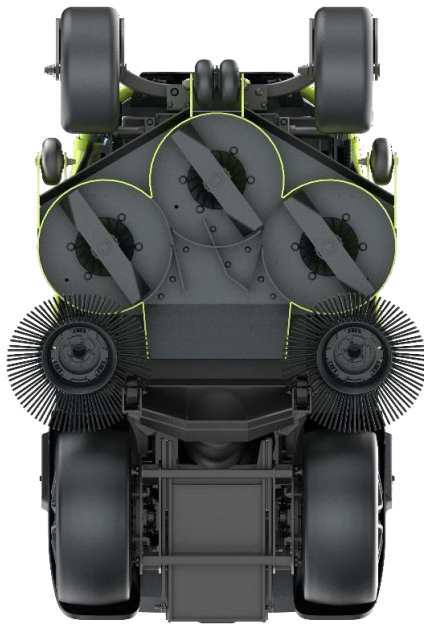	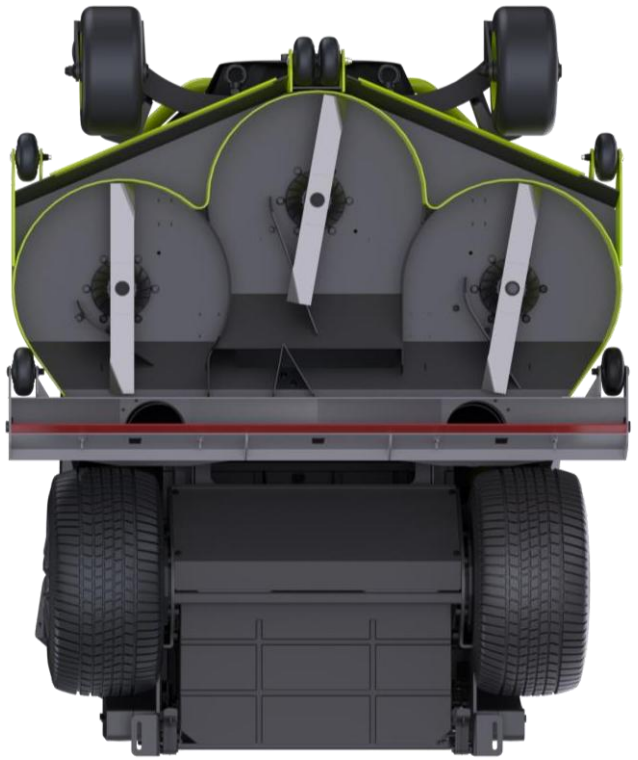	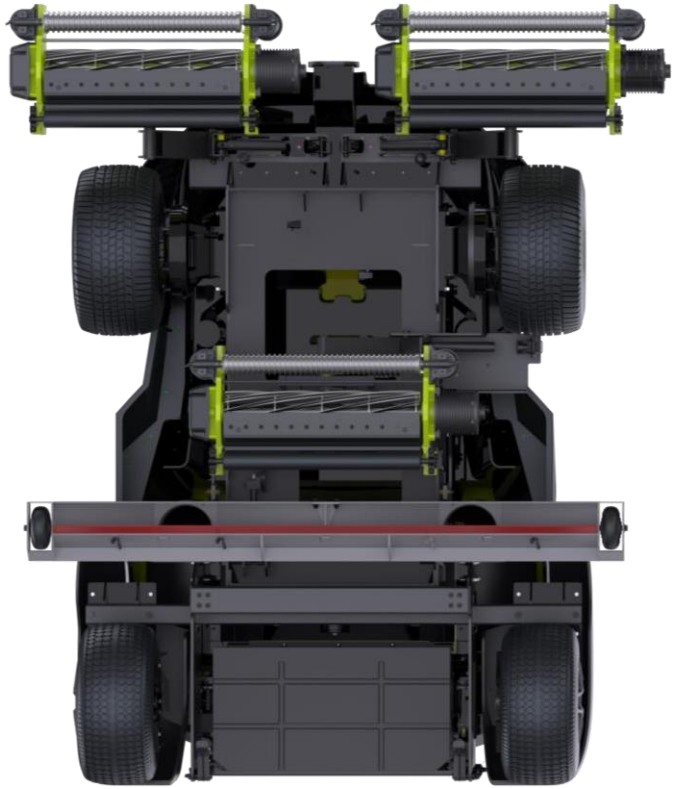
Overall Dimensions (L × W × H)	160.2 × 94.66 × 120	191.05×158×130	195 × 160 (cutting units lowered) × 140

LINKBOTICS

GT3	GT5	GT7
		
Commercial compact robotic mower	**Commercial robotic mower**	**Precision-cut robotic reel mower**
Small to medium campus	**Large, continuous areas**	**Golf Courses and Sports Fields**
Mowing + sweeping+vacuuming+dumping in the fragmented campus lawn	**High-efficiency mowing + vacuuming+dumping in large open Lawns**	**Precision mowing for professional sports turf**


LINKBOTIX